JASUN FILTRATION PLC

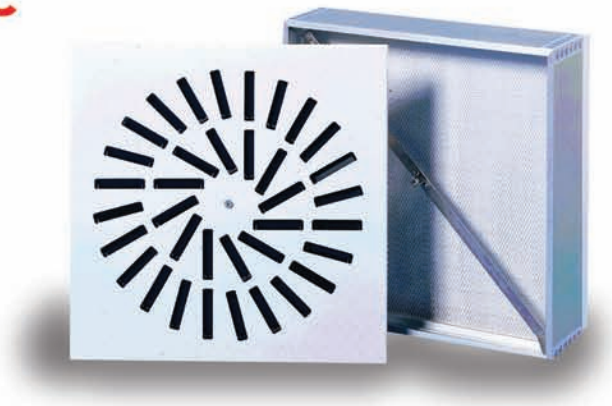

ERISOF RE
Ceiling Hood Module Filters

TYPICAL APPLICATIONS

Ceiling hood filters are used in pharmaceutical, electronic, food processing and other industries requiring a very high degree of clean air.

TECHNICAL SPECIFICATION

MEDIA = Glass fibre paper.
SEPARATORS = Cotton threads with hot melt gluing.
FRAME = Anodized aluminium profile with thermoformed plastic plenum.
FACE GUARDS = Epoxy painted expanded aluminium grids on both sides.
SEALANT = Two components cold moulded polyurethane.
DIFFUSER = Helicoidal grid in epoxy painted steel RAL 9010.
The hoods are typically installed in an inverted T-bar grid suspended from the ceiling. When a unit reaches its maximum suggested pressure drop. The entire module is discarded.

EFFICIENCY

BS EN 1822 FILTRATION CLASS		
CLASS	Filters global efficiency % for MPPS particles	Local efficiency % for MPPS particles
H11	≥ 95 %	-
H13	≥ 99.95 %	99.75 %
H14	≥ 99.995 %	99.975 %
U15	≥ 99.9995 %	99.9975 %

TESTING = Each filter individually tested.
TEMPERATURE = 80°C max.
RELATIVE HUMIDITY = 100% max.

ENVIRONMENTAL STANDARD
EMS 81914
BS EN ISO 14001:2004

FM 29257
BS EN ISO 9001:2000

Jasun Filtration Plc
Riverside House, Parrett Way
Bridgwater TA6 5LB
United Kingdom

Tel: +44 (0) 1278 452277
Fax: +44 (0) 1278 450873
info@jfilters.com
www.jfilters.com

Issue 1/06

ERISOF RE **Standard Sizes**

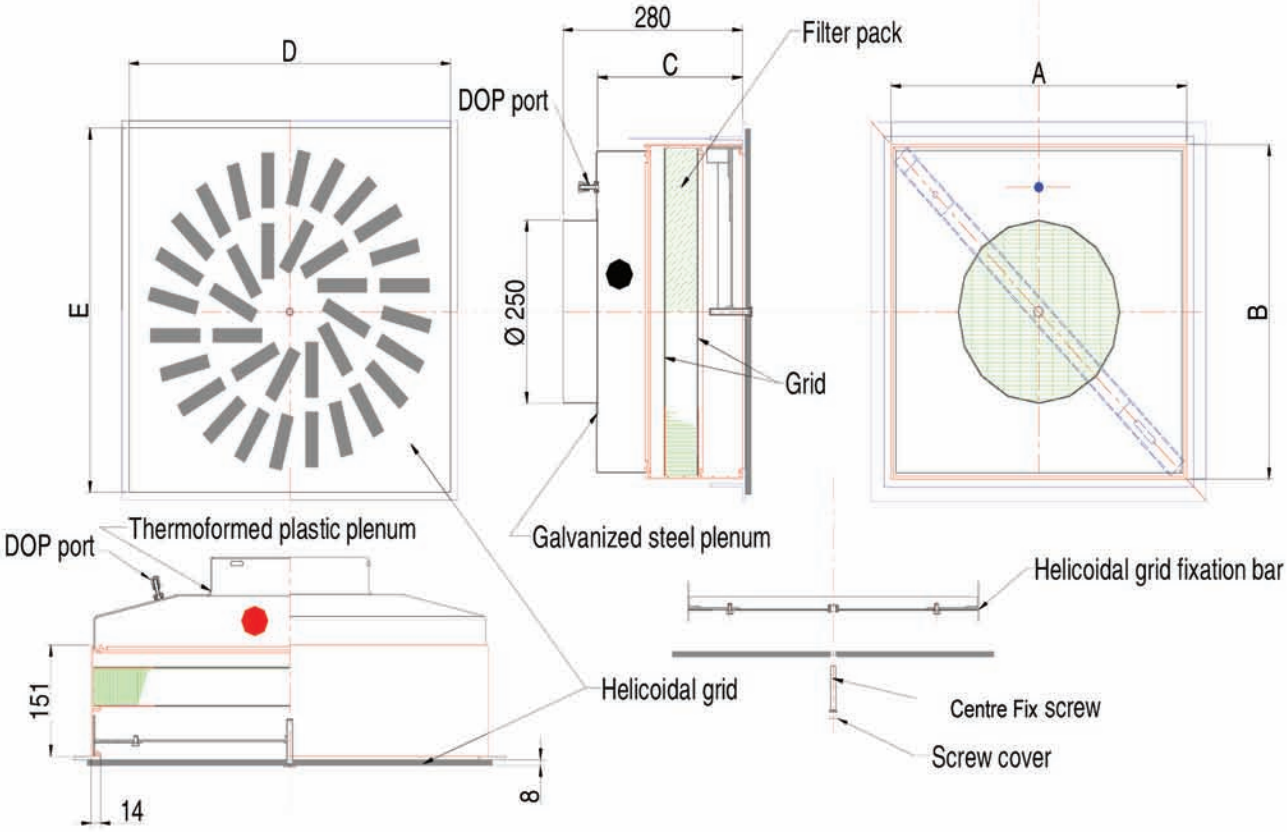

CODE	Dimensions					Flow rate at 0.6 m/s	Filtering surface	Initial Pressure Drop Pa				Volume	Weight
	A	B	C	D	E	m³/h	m²	AH	SV	ST	SU	m³	kg
RE42_10	457	457	230	500	500	450	6.2	120	200	160	170	0.060	7.80
RE52_10	595	595	230	625	625	750	10	120	200	160	170	0.100	9.50
RE62_10	610	610	230	625	625	800	11	120	200	160	170	0.105	10
RE72_10	762	762	230	825	825	1200	16	120	200	160	170	0.165	12.5

All the executions are fitted with DOP/ΔP port and perforated fixed baffle

Suggested final pressure drop ≤ **600Pa**

Maximum pressure drop ≤ **1000 Pa.**

Each filter is supplied with single certificate **(MPPS)**